FOR QUESTIONS, CALL THE
Jacksonville Office
REGION 65
PHONE: (904) 463 - 6242
EMAIL: reg65@econair.com

PATENT NUMBERS

AC-PSP (UNITED STATES) - US PATENT 7963830 B2.
AC-PSP WALL (CANADA) - CA PATENT 2820509.
AC-PSP ISLAND (CANADA) - CA PATENT 2520330.

HOOD INFORMATION – JOB#7376750

HOOD NO	TAG	MODEL	MANUFACTURER	LENGTH	MAX COOKING TEMP	TYPE	APPLIANCE DUTY	DESIGN CFM/FT	TOTAL EXH CFM	EXHAUST PLENUM RISER(S) WIDTH	LENG	HEIGHT	DIA	CFM	VEL	SP	TOTAL SUPPLY CFM	HOOD CONSTRUCTION	HOOD CONFIG END TO END	ROW
1		6030 EX-2-PSP-F	ECON-AIR	8' 0"	600 DEG	I	HEAVY	275	2200			4"	14"	2200	2058	-0.521"	1760	430 SS WHERE EXPOSED	LEFT	ALONE
2		6030 EX-2-PSP-F	ECON-AIR	8' 0"	600 DEG	I	HEAVY	275	2200			4"	14"	2200	2058	-0.521"	1760	430 SS WHERE EXPOSED	RIGHT	ALONE

HOOD INFORMATION

HOOD NO	TAG	FILTER(S) TYPE	QTY	HEIGHT	LENGTH	EFFICIENCY @ 7 MICRONS	LIGHT(S) QTY	TYPE	WIRE GUARD	UTILITY CABINET(S) LOCATION	SIZE	FIRE SYSTEM TYPE	SIZE	ELECTRICAL MODEL #	SWITCHES QUANTITY	FIRE SYSTEM PIPING	HOOD HANGING WEIGHT
1		SS BAFFLE WITH HANDLES	5	20"	16"	30%	3	L55 SERIES E26	NO							NO	497 LBS
2		SS BAFFLE WITH HANDLES	5	20"	16"	30%	3	L55 SERIES E26	NO							NO	532 LBS

HOOD OPTIONS

HOOD NO	TAG	OPTION
1		FIELD WRAPPER 12.00" HIGH FRONT.
		BACKSPLASH 80.00" HIGH X 193.00" LONG 430 SS VERTICAL.
		LEFT SIDESPLASH 80.00" HIGH X 60.00" LONG 430 SS VERTICAL.
		LEFT END STANDOFF (FINISHED) 1" WIDE 60" LONG INSULATED.
		LEFT WALL AS END PANEL.
2		FIELD WRAPPER 12.00" HIGH FRONT.
		FIELD WRAPPER 18.00" HIGH FRONT, RIGHT.
		BACKSPLASH 80.00" HIGH X 96.00" LONG 430 SS VERTICAL.

PERFORATED SUPPLY PLENUM(S)

HOOD NO	TAG	POS	LENGTH	WIDTH	HEIGHT	TYPE	RISER(S) WIDTH	LENG	DIA	CFM	SP
1		Front	97"	18"	6"	MUA	12"	24"		586	0.155"
						MUA	12"	24"		586	0.155"
						MUA	12"	24"		586	0.155"
2		Front	96"	18"	6"	MUA	12"	24"		586	0.155"
						MUA	12"	24"		586	0.155"
						MUA	12"	24"		586	0.155"

(8)

GREASE DUCT & CHIMNEY SPECIFICATIONS:
PROVIDE GREASE DUCT EQUAL TO ECON-AIR MODEL "EDW" ROUND 20 GAUGE 430 STAINLESS STEEL DUCTWORK. MODEL "EDW" IS LISTED TO UL-1978 AND IS INSTALLED USING "V" CLAMP LOCKING CONNECTIONS SEALED WITH 3M FIRE BARRIER 2000 PLUS. MODEL "EDW" DOES NOT REQUIRE WELDING PROVIDING IT HAS BEEN INSTALLED PER THE MANUFACTURES INSTALLATION GUIDE.
PROVIDE RATED ACCESS DOORS AT EVERY CHANGE IN DIRECTION AND EVERY 12' ON CENTER. PER MANUFACTURES LISTING MODEL "EDW" HORIZONTAL RUNS LESS THAN 75 FT. CAN BE SLOPED 1/16" PER 12", HORIZONTAL RUNS MORE THAN 75 FT. CAN BE SLOPED 3/16" PER 12". DUCT SHOULD BE SLOPED AS MUCH AS POSSIBLE TO REDUCE THE CHANCE OF GREASE ACCUMULATION IN HORIZONTAL RUNS.

IF THE DUCT OR CHIMNEY IS WITHIN 18 INCHES OF COMBUSTIBLE MATERIAL, PROVIDE UL-2221 OR UL-103 HT LISTED DOUBLE WALL GREASE DUCT OR DOUBLE WALL CHIMNEY EQUAL TO ECON-AIR MODEL "EDW- 2R, 2R TYPE HT, 3R, OR 3Z" ROUND 20 GAUGE 430 STAINLESS INNER DUCT INSULATED WITH A 24 GAUGE 430 STAINLESS OUTER SHELL.

ECON-AIR RECOMMENDS THE USE OF LISTED, PRE-FABRICATED ROUND GREASE EXHAUST DUCT TO REDUCE STATIC PRESSURE IN THE SYSTEM, MINIMIZE INSTALLATION AND INSPECTION TIMES, AND ENSURE DUCT IS LIQUID TIGHT

HVAC DISTRIBUTION NOTE

HIGH VELOCITY DIFFUSERS OR HVAC RETURNS SHOULD NOT BE PLACED WITHIN TEN (10) FEET OF THE EXHAUST HOOD. PERFORATED DIFFUSERS ARE RECOMMENDED.

VERIFY CEILING HEIGHT

___' - ___"

HEIGHT REQUIRED TO VERIFY THAT HOOD FITS SPACE AND TO SIZE THE ENCLOSURE PANELS

CUSTOMER APPROVAL TO MANUFACTURE:

APPROVED AS NOTED ☐
APPROVED WITH NO EXCEPTION TAKEN ☐
REVISE AND RESUBMIT ☐
SIGNATURE _____
YOUR TITLE _____ DATE _____ _____

REVISIONS

	DESCRIPTION	DATE:
△		
△		
△		
△		

econ·air
www.econair.com
Jacksonville Office
25 N. Market St. Office# 229, Jacksonville, FL 32202 PHONE: (904) 463 - 6242 FAX: 9192275923 EMAIL: reg65@econair.com

Bourbon Grill
STATESBORO, GA, 30459

DATE: 2/28/2025
DWG.#: 7376750
DRAWN BY:
SCALE: 3/4" = 1'-0"
MASTER DRAWING

SHEET NO.
1

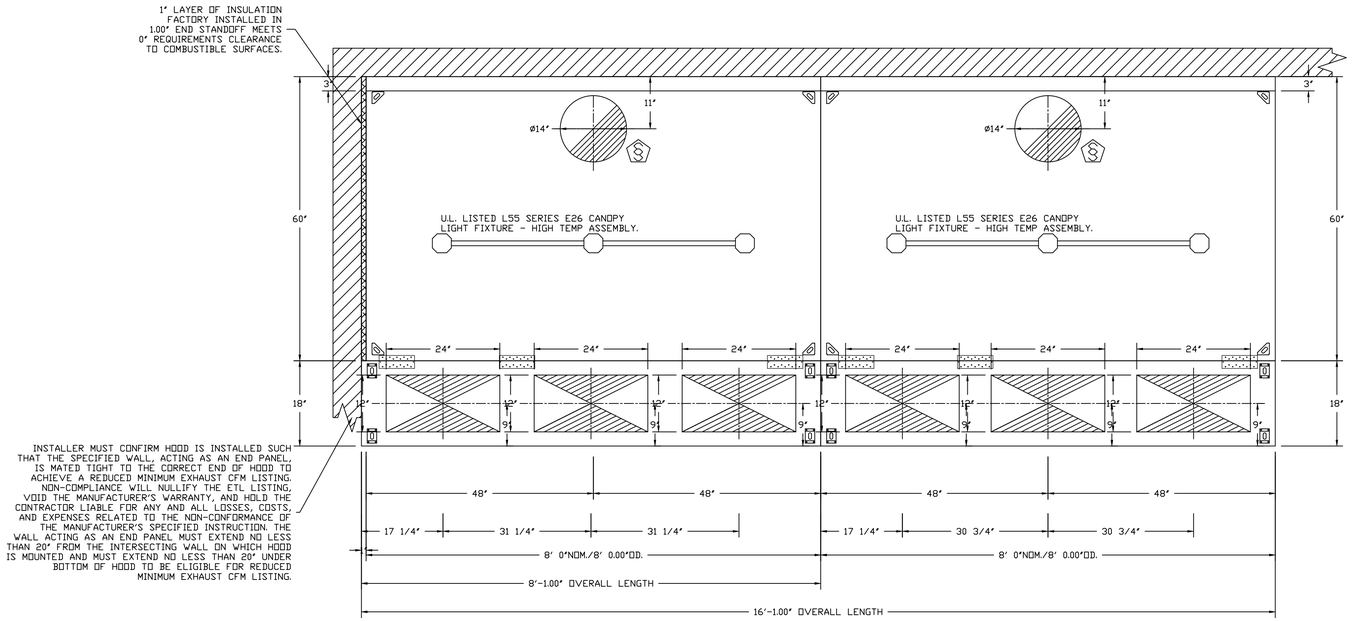

PLAN VIEW - HOOD #1
8' 0.00" LONG 6030EX-2-PSP-F

PLAN VIEW - HOOD #2
8' 0.00" LONG 6030EX-2-PSP-F

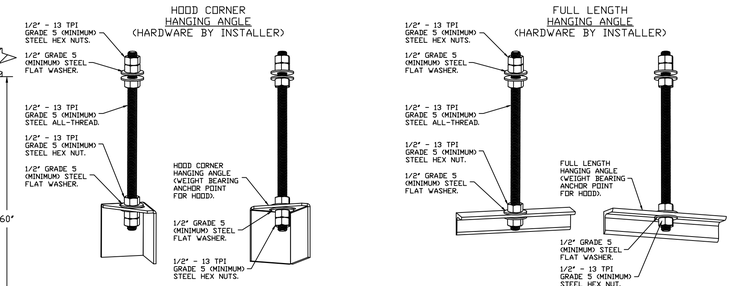

ASSEMBLY INSTRUCTIONS

HANGING ANGLE MUST BE SUPPORTED WITH 1/2" - 13 TPI GRADE 5 (MINIMUM) ALL-THREAD. SANDWICH HANGING ANGLES AND CEILING ANCHOR POINTS WITH 1/2" GRADE 5 (MINIMUM) STEEL FLAT WASHERS AND 1/2" - 13 TPI GRADE 5 (MINIMUM) HEX NUTS AS SHOWN. MUST USE DOUBLED HEX NUT CONFIGURATION BENEATH HOOD HANGING ANGLES AND ABOVE CEILING ANCHORS. MAINTAIN 1/4" OF EXPOSED THREADS BENEATH BOTTOM HEX NUT. TORQUE ALL HEX NUTS TO 57 FT-LBS.

ASSEMBLY INSTRUCTIONS

HANGING ANGLE MUST BE SUPPORTED WITH 1/2" - 13 TPI GRADE 5 (MINIMUM) ALL-THREAD. SANDWICH HANGING ANGLES AND CEILING ANCHOR POINTS WITH 1/2" GRADE 5 (MINIMUM) STEEL FLAT WASHERS AND 1/2" - 13 TPI GRADE 5 (MINIMUM) HEX NUTS AS SHOWN. MUST USE DOUBLED HEX NUT CONFIGURATION ABOVE CEILING ANCHORS. SINGLE HEX NUT BENEATH HANGING ANGLE IS ACCEPTABLE FOR FULL LENGTH HANGING ANGLES. MAINTAIN 1/4" OF EXPOSED THREADS BENEATH BOTTOM HEX NUT. TORQUE ALL HEX NUTS TO 57 FT-LBS.

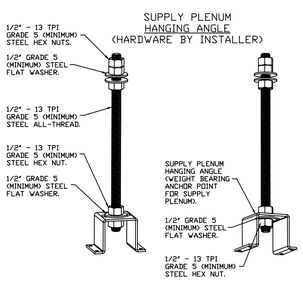

ASSEMBLY INSTRUCTIONS

HANGING ANGLE MUST BE SUPPORTED WITH 1/2" - 13 TPI GRADE 5 (MINIMUM) ALL-THREAD. SANDWICH HANGING ANGLES AND CEILING ANCHOR POINTS WITH 1/2" GRADE 5 (MINIMUM) STEEL FLAT WASHERS AND 1/2" - 13 TPI GRADE 5 (MINIMUM) HEX NUTS AS SHOWN. MUST USE DOUBLED HEX NUT CONFIGURATION ABOVE CEILING ANCHORS. SINGLE HEX NUT BENEATH HANGING ANGLE IS ACCEPTABLE FOR PSP HANGING ANGLES. MAINTAIN 1/4" OF EXPOSED THREADS BENEATH BOTTOM HEX NUT. TORQUE ALL HEX NUTS TO 57 FT-LBS.

CLEARANCE TO COMBUSTIBLES

HOODS #	SURFACE	*CLEARANCE
1	TOP	18"
	FRONT	0"
	BACK	18"
	LEFT	0"
	RIGHT	18"
2	TOP	18"
	FRONT	0"
	BACK	18"
	LEFT	18"
	RIGHT	18"

- *0" CLEARANCE TO COMBUSTIBLES CONFORMS TO UL710 STANDARD.

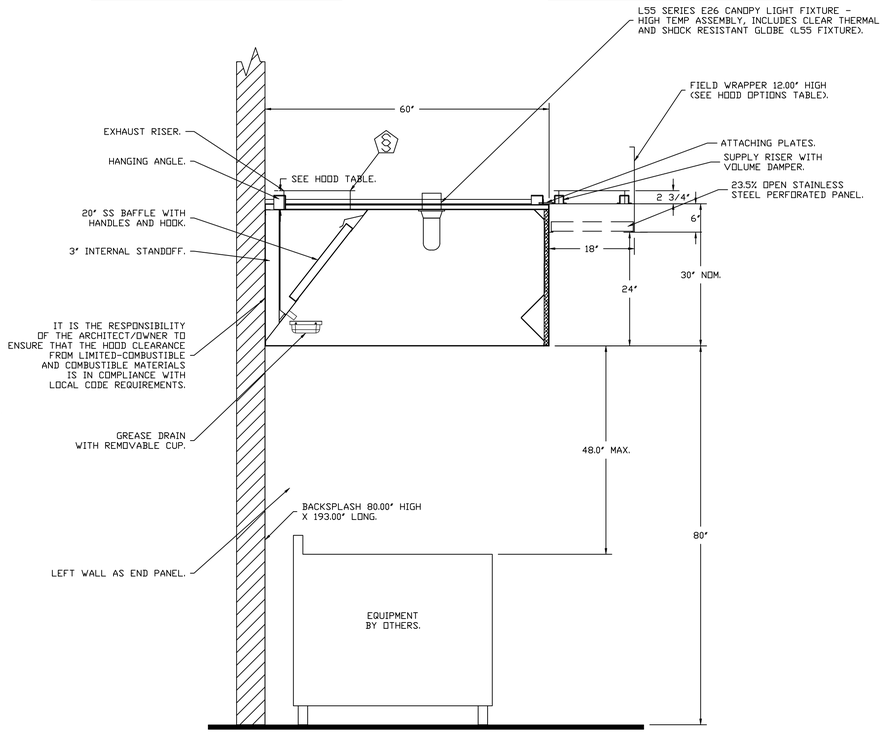

SECTION VIEW - MODEL 6030EX-2-PSP-F
HOOD - #1

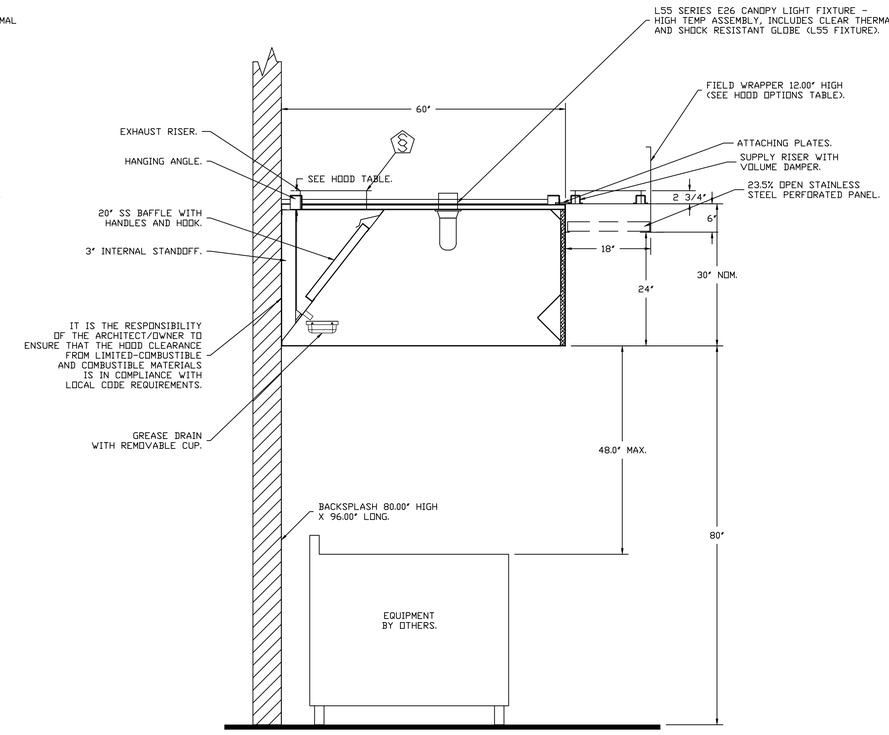

SECTION VIEW - MODEL 6030EX-2-PSP-F
HOOD - #2

REVISIONS

DESCRIPTION	DATE:

econ·air
www.econair.com
Jacksonville Office
25 N. Market St. Office# 229, Jacksonville, FL, 32202 PHONE: (904) 463 - 6242 FAX: 9192275923 EMAIL: reg65@econair.com

Bourbon Grill
STATESBORO, GA, 30459

DATE: 2/28/2025

DWG.#: 7376750

DRAWN BY:

SCALE: 3/4" = 1'-0"

MASTER DRAWING

SHEET NO. 2

BACKSPLASH

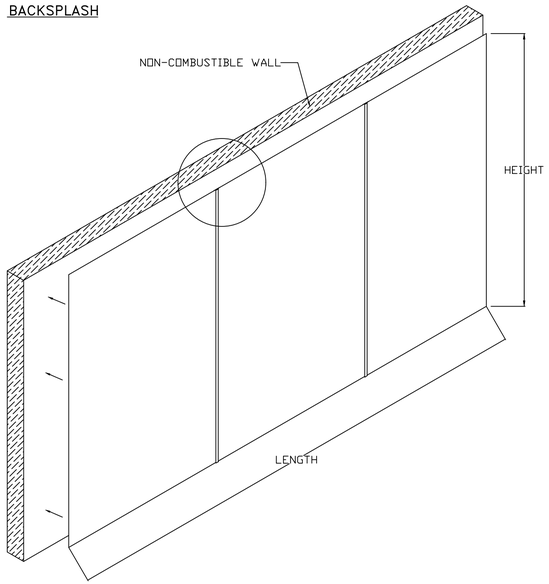

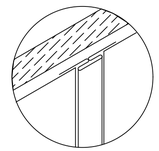

BACKSPLASH PANELS SLIDE INTO DIVIDER BAR

- BACKSPLASH IS NOT INSULATED AND IS UNSUITABLE FOR INSTALL AGAINST COMBUSTIBLE WALLS

REVISIONS

DESCRIPTION	DATE:

econ·air
www.econair.com
Jacksonville Office
25 N. Market St. Office# 229, Jacksonville, FL 32202 PHONE: (904) 463 - 6242 FAX: 9192275923 EMAIL: reg65@econair.com

Bourbon Grill
STATESBORO, GA, 30459

DATE: 2/28/2025

DWG.#: 7376750

DRAWN BY:

SCALE: 3/4" = 1'-0"

MASTER DRAWING

SHEET NO. 3

EXHAUST FAN INFORMATION – JOB#7376750

FAN UNIT NO	TAG	QTY	FAN UNIT MODEL #	MANUFACTURER	CFM	ESP	RPM	MOTOR ENCL	HP	BHP	PHASE	VOLT	FLA	DISCHARGE VELOCITY	WEIGHT (LBS)	SONES
1		1	EADU240H	ECON-AIR	4400	2.000	1015	ODP,PREMIUM	5.000	2.9370	3	208	15.2	1000 FPM	372	21

MUA FAN INFORMATION – JOB#7376750

FAN UNIT NO	TAG	QTY	FAN UNIT MODEL #	BLOWER	HOUSING	MIN CFM	DESIGN CFM	ESP	RPM	MOTOR ENCL	HP	BHP	PHASE	VOLT	FLA	MCA	MOCP	WEIGHT (LBS)	SONES
2		1	EA-A2-20D	20MF-2-MOD	A2	1500	3520	0.500	1230	ODP,PREMIUM	1.500	1.0480	3	208	6.6	8.3A	15A	412	13.3

FAN OPTIONS

FAN UNIT NO	TAG	QTY	DESCRIPTION
1		1	GREASE BOX
		1	FAN BASE CERAMIC SEAL - DU/DR240HFA - INSTALLED AT PLANT - FOR GREASE DUCTS
		1	VAV PACKAGE W/ MANUAL CONTROL (VFD INCLUDED)
		1	VFD FACTORY MOUNTED AND WIRED IN EXHAUST FAN
		1	VFD MOUNTING BRACKET FOR DU/DR 240
		1	EXHAUST FAN HEAT BAFFLE
		1	2 YEAR PARTS WARRANTY
2		1	SIZE 2 UNTEMPERED COMMERCIAL DOWN DISCHARGE FOR DIRECT DRIVE AHUS
		1	VAV PACKAGE W/ MANUAL CONTROL FOR NON TEMPERED UNITS (VFD INCLUDED)
		1	2 YEAR PARTS WARRANTY

FAN ACCESSORIES

FAN UNIT NO	TAG	EXHAUST			SUPPLY			
		GREASE CUP	GRAVITY DAMPER	WALL MOUNT	SIDE DISCHARGE	GRAVITY DAMPER	MOTORIZED DAMPER	WALL MOUNT
1		YES						

CURB ASSEMBLIES

NO	ON FAN	WEIGHT	ITEM	SIZE
1	# 1	90 LBS	CURB	31.500"W X 31.500"L X 26.000"H 0.250:12.000 PITCH ALONG LENGTH, RIGHT VENTED HINGED 16 GAUGE.
2	# 2	70 LBS	CURB	31.000"W X 37.000"L X 20.000"H 0.250:12.000 PITCH ALONG WIDTH, RIGHT INSULATED 16 GAUGE.

FAN #1 EADU240H - EXHAUST FAN

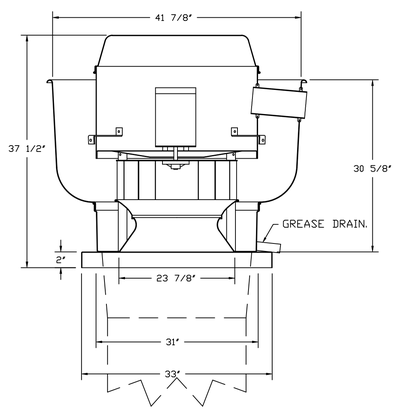

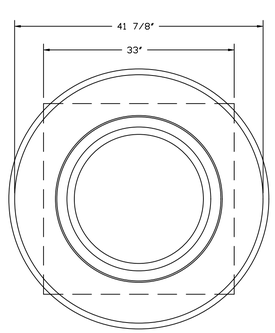

TOP VIEW

FEATURES:

- DIRECT DRIVE CONSTRUCTION (NO BELTS/PULLEYS).
- ROOF MOUNTED FANS.
- RESTAURANT MODEL.
- UL705 AND UL762 AND ULC-S645
- VARIABLE SPEED CONTROL.
- INTERNAL WIRING.
- THERMAL OVERLOAD PROTECTION (SINGLE PHASE).
- HIGH HEAT OPERATION 300°F (149°C).
- GREASE CLASSIFICATION TESTING.
- NEMA 3R SAFETY DISCONNECT SWITCH.

NORMAL TEMPERATURE TEST
EXHAUST FAN MUST OPERATE CONTINUOUSLY WHILE EXHAUSTING AIR AT 300°F (149°C) UNTIL ALL FAN PARTS HAVE REACHED THERMAL EQUILIBRIUM, AND WITHOUT ANY DETERIORATING EFFECTS TO THE FAN WHICH WOULD CAUSE UNSAFE OPERATION.

ABNORMAL FLARE-UP TEST
EXHAUST FAN MUST OPERATE CONTINUOUSLY WHILE EXHAUSTING BURNING GREASE VAPORS AT 600°F (316°C) FOR A PERIOD OF 15 MINUTES WITHOUT THE FAN BECOMING DAMAGED TO ANY EXTENT THAT COULD CAUSE AN UNSAFE CONDITION.

OPTIONS

- GREASE BOX.
- FAN BASE CERAMIC SEAL - DU/DR240HFA - INSTALLED AT PLANT - FOR GREASE DUCTS.
- VAV PACKAGE W/ MANUAL CONTROL (VFD INCLUDED).
- VFD FACTORY MOUNTED AND WIRED IN EXHAUST FAN.
- VFD MOUNTING BRACKET FOR DU/DR 240.
- EXHAUST FAN HEAT BAFFLE.
- 2 YEAR PARTS WARRANTY.

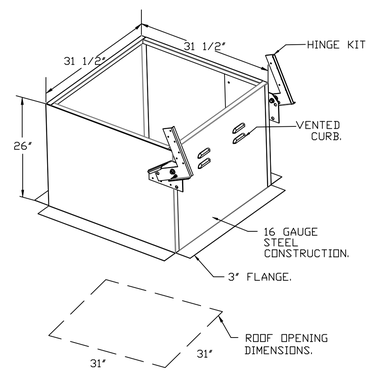

PITCHED CURBS ARE AVAILABLE FOR PITCHED ROOFS.

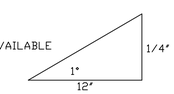

SPECIFY PITCH:
EXAMPLE: 7/12 PITCH = 30° SLOPE.

REVISIONS

DESCRIPTION	DATE:

econ·air
www.econair.com
Jacksonville Office
25 N. Market St. Office# 229, Jacksonville, FL, 32202 PHONE: (904) 463 - 6242 FAX: 9192275923 EMAIL: reg65@econair.com

Bourbon Grill
STATESBORO, GA, 30459

DATE: 2/28/2025

DWG.#: 7376750

DRAWN BY:

SCALE: 3/4" = 1'-0"

MASTER DRAWING

SHEET NO. 4

FAN #3 EA-A2-203 - SUPPLY FAN
1. UNTEMPERED SUPPLY UNIT WITH 20" MIXED FLOW DIRECT DRIVE FAN IN SIZE #2 HOUSING.
2. INTAKE HOOD WITH EZ FILTER.
3. BOTTOM DISCHARGE, INTAKE RIGHT -> LEFT.
4. BOTTOM DISCHARGE CONSTRUCTION FOR SIZE 2 UNTEMPERED DIRECT DRIVE AHUS.
5. VAV (VARIABLE-AIR-VOLUME) WIRING PACKAGE FOR NON TEMPERED COMMERCIAL FANS.
MANUAL SPEED CONTROL VARIABLE FREQUENCY DRIVE INCLUDED.
6. HINGED DOUBLE WALL INSULATED DOOR ASSEMBLY (BURNER/BLOWER SECTION).
7. 2 YEAR PARTS WARRANTY.

*NOTE: SUPPLY DUCT MUST BE INSTALLED TO MEET SMACNA STANDARDS. A MINIMUM STRAIGHT DUCT LENGTH MUST BE MAINTAINED DOWNSTREAM OF UNIT DISCHARGE AS OUTLINED IN AMCA PUBLICATION 201. WHEN USING RECTANGULAR DUCTWORK, ELBOWS MUST BE RADIUS THROAT, RADIUS BACK WITH TURNING VANES. FLEXIBLE DUCTWORK AND SQUARE THROAT/SQUARE BACK ELBOWS SHOULD NOT BE USED. ANY TRANSITION AND/OR TURNS IN THE DUCTWORK WILL CAUSE SYSTEM EFFECT. SYSTEM EFFECT WILL DRASTICALLY INCREASE STATIC PRESSURE AND REDUCE AIRFLOW. DO NOT RELY ON UNIT TO SUPPORT DUCT IN ANY WAY. FAILURE TO PROPERLY SIZE DUCTWORK MAY CAUSE SYSTEM EFFECTS AND REDUCE PERFORMANCE OF THE EQUIPMENT.
SUGGESTED STRAIGHT DUCT SIZE IS 20" x 20".

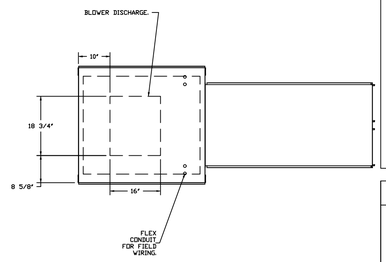

GREASE DUCT & CHIMNEY SPECIFICATIONS:
PROVIDE GREASE DUCT EQUAL TO ECON-AIR MODEL "EDW" ROUND 20 GAUGE 430 STAINLESS STEEL DUCTWORK. MODEL "EDW" IS LISTED TO UL-1978 AND IS INSTALLED USING "V" CLAMP LOCKING CONNECTIONS SEALED WITH 3M FIRE BARRIER 2000 PLUS. MODEL "EDW" DOES NOT REQUIRE WELDING PROVIDING IT HAS BEEN INSTALLED PER THE MANUFACTURES INSTALLATION GUIDE.
PROVIDE RATED ACCESS DOORS AT EVERY CHANGE IN DIRECTION AND EVERY 12' ON CENTER. PER MANUFACTURES LISTING MODEL "EDW" HORIZONTAL RUNS LESS THAN 75 FT. CAN BE SLOPED 1/16" PER 12", HORIZONTAL RUNS MORE THAN 75 FT. CAN BE SLOPED 3/16" PER 12". DUCT SHOULD BE SLOPED AS MUCH AS POSSIBLE TO REDUCE THE CHANCE OF GREASE ACCUMULATION IN HORIZONTAL RUNS.

IF THE DUCT OR CHIMNEY IS WITHIN 18 INCHES OF COMBUSTIBLE MATERIAL, PROVIDE UL-2221 OR UL-103 HT LISTED DOUBLE WALL GREASE DUCT OR DOUBLE WALL CHIMNEY EQUAL TO ECON-AIR MODEL "EDW- 2R, 2R TYPE HT, 3R, OR 3Z" ROUND 20 GAUGE 430 STAINLESS INNER DUCT INSULATED WITH A 24 GAUGE 430 STAINLESS OUTER SHELL.

CUSTOMER APPROVAL TO MANUFACTURE:

APPROVED AS NOTED ☐
APPROVED WITH NO EXCEPTION TAKEN ☐
REVISE AND RESUBMIT ☐
SIGNATURE _____
YOUR TITLE _____ DATE _____

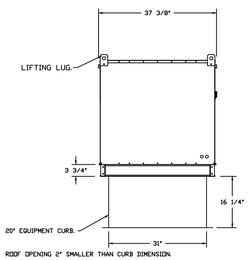

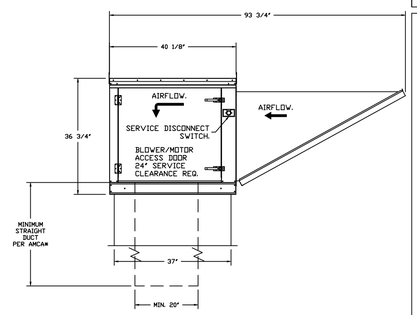

PITCHED CURBS ARE AVAILABLE FOR PITCHED ROOFS.

SPECIFY PITCH:
EXAMPLE: 7/12 PITCH = 30° SLOPE.

OPTIONS:
- FULL BOTTOM CORNERS.

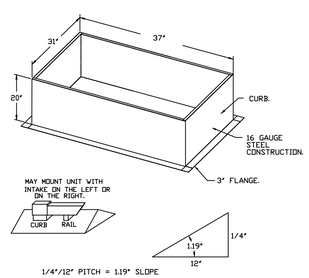

GREASE BOX INSTALLATION

GREASEBOX
REV:A2 08/19/02

CLOSED POSITION

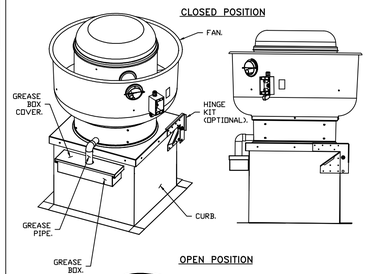

OPEN POSITION

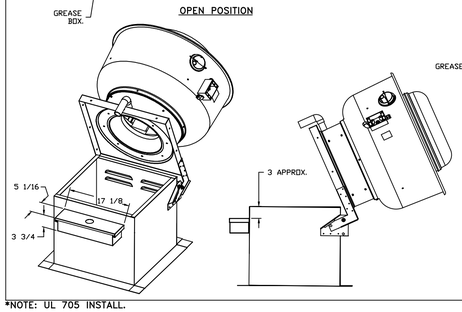

*NOTE: UL 705 INSTALL.

PARTS INCLUDED

GREASE BOX.
GREASE BOX COVER.
GREASE PIPE.

SHEET METAL SCREWS
3 - LONG (3/4" LG).

GREASE BOX FIELD INSTALLATION

STEP 1)
ATTACH GREASE BOX COVER TO THE CURB, HOLD 3" DIMENSION AS SHOWN ON PIC. 1. SCREW GREASE BOX COVER TO CURB USING (3) LONG (3/4" LG.) SCREWS AS SHOWN ON PIC. 2.

PIC. 1

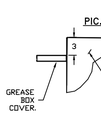

PIC. 2

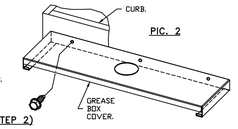

STEP 2)
ATTACH GREASE BOX TO GREASE BOX COVER, SLIDE AND DROP. AS SHOWN ON PIC. 3.

PIC. 3

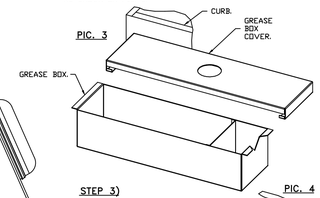

STEP 3)
INSTALL GREASE PIPE AS SHOWN ON PIC. 4.

PIC. 4

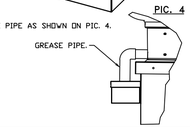

REVISIONS

DESCRIPTION	DATE:

econ·air
www.econair.com
Jacksonville Office
25 N. Market St., Office# 229, Jacksonville, FL, 32202 PHONE: (904) 463 - 6242 FAX: 9192275923 EMAIL: reg65@econair.com

Bourbon Grill
STATESBORO, GA, 30459

DATE: 2/28/2025

DWG.#: 7376750

DRAWN BY:

SCALE: 1/2" = 1'-0"

MASTER DRAWING

SHEET NO. 5

Exhaust Fan Wiring

JOB	7376750 - Bourbon Grill
DRAWING NUMBER	EXH7376750-1
SHIP DATE	2/28/2025
MODEL	EADU240H

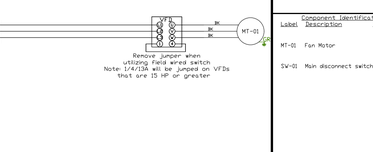

Installed Options

Component Identification

Label	Description	Location
MT-01	Fan Motor	(3)
SW-01	Main disconnect switch	(3)

MOTOR INFO
EXHAUST 3.0HP-208V-3P-15.2FLA
VFD PART: ESV402N02TXB

ELECTRICAL INFORMATION
MOTOR/ETHL MOP: 15A
MOTOR/ETHL CIRCUIT MOP: 30A

NOTES
— — — DENOTES FIELD WIRING
——— DENOTES INTERNAL WIRING

WIRE COLOR

BK - BLACK	YW - YELLOW
BL - BLUE	GR - GREEN
BR - BROWN	GY - GRAY
OR - ORANGE	PR - PURPLE
RD - RED	PK - PINK
WH - WHITE	

VFD Wiring

JOB	7376750 - Bourbon Grill
DRAWING NUMBER	VFD7376750-1
SHIP DATE	2/28/2025
MODEL	EADU240H

SMV SERIES VARIABLE FREQUENCY DRIVE

TERMINAL	FUNCTION
1	Digital Input(Start/Stop)
2	Analog Common
5	Analog Input: 0-10 VDC
6	Internal DC Supply for Speed Pot: +10 VDC
25	Analog Input: 4-20 mA
30	Analog Output
4	Digital Reference/Common
11	Internal 12VDC Supply for External Devices
13A	Digital Input: Configurable with P121
13B	Digital Input: Configurable with P122
13C	Digital Input: Configurable with P123
14	Digital Output: Configurable with P142
30	Analog Output: Configurable with P150_P155
16	Relay Output: Configurable with P140
17	
PE	Ground Terminal
L1	3 Phase Input or Single Phase Input
L2	3 Phase Input or Single Phase Input
L3 (N)	3 Phase Input (Neutral for 120v)
U	3 Phase AC Motor
V	3 Phase AC Motor
W	3 Phase AC Motor

POWER SUPPLY

MOTOR

VARIABLE FREQUENCY DRIVE PARAMETER SETTINGS*

EPM PROGRAM VAV_MANUSE LS_WP EPM IF >= 15HP)
P100 (Start Source) = 01 (Terminal Strip)
P101 = #### (Maximum Frequency Hz)
P102 = #### (Minimum Frequency Hz)
P103 is based on max wheel RPM.
P110 (Start Manual = 03 (Auto Re-start)
P111 (Auto Re-start) = 00 (None)
P144 (Relay Inversion) = 00 (None)
P166 (Carrier Frequency) = 03 (4 kHz)
P171 (Current Limit) = P108 - 1

Adjust manually on all drives
P107 = 01 (Motor FLA = 208 / Drive Output Rating
or 01 (IF 230, 460 or 575 VAC)
P108 = Motor FLA x 208 / Drive Output Rating
P109 (Motor Voltage) = 208 (IF 208/230 Drive)
(Preset#2)(V) P165 FOR STANDARD DRIVE ONLY
P167 (Base Frequency) = Calculated Per Fan

FOR K9 POL ONLY: P200 = 0

When Speed POT is Required the following
Parameters Must be Set:
P100 (Start Source) = 01 (0-10 VDC)
P160 (Speed # 1 VDC Signal) = Min Frequency
P161 (Speed # 10 VDC Signal) = Max Frequency

IT MAY BE REQUIRED TO FULLY POWER DOWN THE DRIVE AND TURN BACK ON IN ORDER TO INGITIATE NEW PARAMETER SETTINGS.

***Min and Max Frequency Settings override all other Preset speeds/Parameters.**

GENERAL NOTES

*Note: Not Suitable for Corner Grounded 3 Phase Input power

Installed Options
Manual Control

Component Identification

MOTOR INFO
EXHAUST 3.0HP-208V-3P-15.2FLA
VFD PART: ESV402N02TXB

ELECTRICAL INFORMATION
MOTOR/ETHL MOP: 15A
MOTOR/ETHL CIRCUIT MOP: 30A

NOTES
— — — DENOTES FIELD WIRING
——— DENOTES INTERNAL WIRING

WIRE COLOR

BK - BLACK	YW - YELLOW
BL - BLUE	GR - GREEN
BR - BROWN	GY - GRAY
OR - ORANGE	PR - PURPLE
RD - RED	PK - PINK
WH - WHITE	

AirHandler Wiring

JOB	7376750 - Bourbon Grill
DRAWING NUMBER	A7376750-2
SHIP DATE	2/28/2025
MODEL	EA-A2-20D

ATTENTION ELECTRICIAN
DROP FOR DISCONNECT CONNECTION
IS FACTORY SUPPLIED
CONNECT POWER TO THE DROP

Installed Options

Component Identification

Label	Description	Location
MT-01	Supply motor	(2)
SW-01	Main disconnect switch	(2)

MOTOR INFO
SUPPLY 1.5HP-208V-3P-6.6FLA
VFD PART: ESV152N02TXB

ELECTRICAL INFORMATION
MOTOR/ETHL MOP: 15A
MOTOR/ETHL CIRCUIT MOP: 15A

NOTES
— — — DENOTES FIELD WIRING
——— DENOTES INTERNAL WIRING

WIRE COLOR

BK-BLACK	YW - YELLOW	RD - RED
BL-BLUE	GR - GREEN	WH - WHITE
BR - BROWN	GY - GRAY	
OR - ORANGE	PR - PURPLE	

VFD Wiring

JOB	7376750 - Bourbon Grill
DRAWING NUMBER	VFD7376750-2
SHIP DATE	2/28/2025
MODEL	EA-A2-20D

SMV SERIES VARIABLE FREQUENCY DRIVE

TERMINAL	FUNCTION
1	Digital Input(Start/Stop)
2	Analog Common
5	Analog Input: 0-10 VDC
6	Internal DC Supply for Speed Pot: +10 VDC
25	Analog Input: 4-20 mA
30	Analog Output
4	Digital Reference/Common
11	Internal 12VDC Supply for External Devices
13A	Digital Input: Configurable with P121
13B	Digital Input: Configurable with P122
13C	Digital Input: Configurable with P123
14	Digital Output: Configurable with P142
30	Analog Output: Configurable with P150_P155
16	Relay Output: Configurable with P140
17	
PE	Ground Terminal
L1	3 Phase Input or Single Phase Input
L2	3 Phase Input or Single Phase Input
L3 (N)	3 Phase Input (Neutral for 120v)
U	3 Phase AC Motor
V	3 Phase AC Motor
W	3 Phase AC Motor

NOT USED FOR EXHAUST FANS
OR NON-HEATED SUPPLY FANS
BURNER CIRCUIT CONTACT

TERMINAL BLOCKS
LOCATED IN HEATER UNIT
(IF SINGLE PHASE INPUT: UNIT MAY
NOT CONTAIN ALL TERMINAL BLOCKS)

EXHAUST FANS AND NON-HEATED
UNITS DO NOT HAVE TERMINALS

All external control wires to motor speed control should be 16-20 AWG shielded multiconductor cables and must not be run in the same conduit or raceway with any high power wiring. Ground Shielded Cable at the drive chassis ONLY.

PG. 11 OF THE DRIVE MANUAL DESCRIBES THE PROPER INSTALLATION PROCEDURE.

PG. 19 OF THE DRIVE MANUAL DESCRIBES THE PROGRAMMING PROCEDURE OF THE DRIVE.

PG. 23 OF THE DRIVE MANUAL DESCRIBES THE PARAMETER SETTINGS OF THE DRIVE.

*NOTE: THE DEFAULT PASSWORD FROM THE FACTORY REQUIRED TO PROGRAM THE DRIVE IS "1255".

VARIABLE FREQUENCY DRIVE PARAMETER SETTINGS*

EPM PROGRAM VAV_MANUSE LS_WP EPM IF >= 15HP)
P100 (Start Source) = 01 (Terminal Strip)
P101 = #### (Maximum Frequency Hz)
P102 = #### (Minimum Frequency Hz)
P103 is based on max wheel RPM.
P110 (Start Manual = 03 (Auto Re-start)
P111 (Auto Re-start) = 00 (None)
P144 (Relay Inversion) = 00 (None)
P166 (Carrier Frequency) = 03 (4 kHz)
P171 (Current Limit) = P108 - 1

Adjust manually on all drives
P107 = 01 (Motor FLA = 208 / Drive Output Rating
or 01 (IF 230, 460 or 575 VAC)
P108 = Motor FLA x 208 / Drive Output Rating
P109 (Motor Voltage) = 208 (IF 208/230 Drive)
(Preset#2)(V) P165 FOR STANDARD DRIVE ONLY
P167 (Base Frequency) = Calculated Per Fan

FOR K9 POL ONLY: P200 = 0

When Speed POT is Required the following
Parameters Must be Set:
P100 (Start Source) = 01 (0-10 VDC)
P160 (Speed # 1 VDC Signal) = Min Frequency
P161 (Speed # 10 VDC Signal) = Max Frequency

IT MAY BE REQUIRED TO FULLY POWER DOWN THE DRIVE AND TURN BACK ON IN ORDER TO INGITIATE NEW PARAMETER SETTINGS.

***Min and Max Frequency Settings override all other Preset speeds/Parameters.**

GENERAL NOTES

*Note: Not Suitable for Corner Grounded 3 Phase Input power

Installed Options
Manual Control

Component Identification

MOTOR INFO
SUPPLY 1.5HP-208V-3P-6.6FLA
VFD PART: ESV152N02TXB

ELECTRICAL INFORMATION
MOTOR/ETHL MOP: 15A
MOTOR/ETHL CIRCUIT MOP: 15A

NOTES
— — — DENOTES FIELD WIRING
——— DENOTES INTERNAL WIRING

WIRE COLOR

BK - BLACK	YW - YELLOW
BL - BLUE	GR - GREEN
BR - BROWN	GY - GRAY
OR - ORANGE	PR - PURPLE
RD - RED	PK - PINK
WH - WHITE	

REVISIONS

DESCRIPTION	DATE:

econ·air
www.econair.com
Jacksonville Office
25 N. Market St, Office# 229, Jacksonville, FL, 32202 PHONE: (904) 463 - 6242 FAX: 9192275923 EMAIL: reg65@econair.com

Bourbon Grill
STATESBORO, GA, 30459

DATE: 2/28/2025

DWG.#: 7376750

DRAWN BY:

SCALE: 3/4" = 1'-0"

MASTER DRAWING

SHEET NO.
6

DUCTWORK #1 PARTS – JOB#7376750

TAG	PART #	CFM	GPM	ZONE	COVEREDBY	SP	WEIGHT	VELOCITY	QTY	DESCRIPTION
P1	EDW1420ADP21	2200				-0.1459	14.35	2057.97	1	SINGLE WALL DUCT ADAPTER, 14" DUCT DIA TO 20" DUCT DIA, ASSEMBLY - 430 STAINLESS STEEL.
SYSTEM AT P1						-1.1869	0.00			
P2	EDW2090ASY	2200				-0.0429	18.41	1008.41	1	SINGLE WALL DUCT 90 DEGREE ELBOW, 20" DUCT, ASSEMBLY.
SYSTEM AT P2						-1.2298	0.00			
P3	EDW20TEASY	4400		1		-0.4486	26.16	2016.81	1	SINGLE WALL DUCT TEE, 20" DUCT, ASSEMBLY.
SYSTEM AT P3						-1.8174	0.00			
P4	EDW1420ADP21	2200				-0.1459	14.35	2057.97	1	SINGLE WALL DUCT ADAPTER, 14" DUCT DIA TO 20" DUCT DIA, ASSEMBLY - 430 STAINLESS STEEL.
SYSTEM AT P4						-1.3688	0.00			
P5	EDW1407LT	2200				-0.0044	3.63	2057.97	1	SINGLE WALL DUCT 14" DIAMETER, 7" LONG, FLANGE AT BOTH ENDS. STAINLESS STEEL.
SYSTEM AT P5						-1.2229	0.00			
P6	EDW1415AJDKIT	2200				-0.0044	14.25	2057.97	1	SINGLE WALL DUCT ADJUSTABLE, 14" DIAMETER, 14.50" LONG, FLANGE AT ONE END WITH A 14" ADJUSTABLE COLLAR - STAINLESS STEEL.
SYSTEM AT P6						-1.2229	0.00			
P7	EDW14SUBRASY						2.96		1	DUCT SUPPORT BRACKET KIT, 14" DUCT, USED FOR HANGING DUCT. 12 GA STEEL, CLEAR ZINC COATING. - 2 RINGS, 4 BRACKETS, & HARDWARE BAG 2.
P8 ASSEMBLED W/P11	EDW14TEASY	2200		1		-0.158	15.95	2057.97	1	SINGLE WALL DUCT TEE, 14" DUCT, ASSEMBLY.
SYSTEM AT P8						-1.2141	0.00			
P9	EDW1411LT	2200				-0.0069	5.46	2057.97	1	SINGLE WALL DUCT 14" DIAMETER, 11" LONG, FLANGE AT BOTH ENDS. STAINLESS STEEL.
SYSTEM AT P9						-1.0561	0.00			
P10	EDW1424AJDKIT	2200				-0.0082	14.56	2057.97	1	SINGLE WALL DUCT ADJUSTABLE, 14" DIAMETER, 23.5" LONG, FLANGE AT ONE END WITH A 14" ADJUSTABLE COLLAR - STAINLESS STEEL.
SYSTEM AT P10						-1.0561	0.00			
P11 ASSEMBLED W/P8 O=S	EDW1415ADKIT						3.72		1	DUCT ACCESS DOOR WITH HANDLE & GREASE DAM, FOR 14" DUCT USE 15" DOOR. STAINLESS STEEL.
P12	EDW2029LT	4400				-0.0092	19.42	2016.81	1	SINGLE WALL DUCT 20" DIAMETER, 29" LONG, FLANGE AT BOTH ENDS. STAINLESS STEEL.
SYSTEM AT P12						-1.8317	0.00			
P13	EDW2024AJDKIT	4400				-0.0051	20.76	2016.81	1	SINGLE WALL DUCT ADJUSTABLE, 20" DIAMETER, 23.5" LONG, FLANGE AT ONE END WITH A 20" ADJUSTABLE COLLAR - STAINLESS STEEL.
SYSTEM AT P13						-1.8317	0.00			
P14 ASSEMBLED W/P15	EDW2029LT	4400				-0.0092	19.42	2016.81	1	SINGLE WALL DUCT 20" DIAMETER, 29" LONG, FLANGE AT BOTH ENDS. STAINLESS STEEL.
SYSTEM AT P14						-1.8409	0.00			
P15 ASSEMBLED W/P14 O=B	EDW2620TP	4400					9.42	2016.81	1	DUCT TO CURB TRANSITION, 26-1/2" CURB TO 20" DUCT, 16 GA ALUMINIZED. USED ON BDU20.
	E3M-2000PLUS						0.80		4	DUCT - 3M FIRE BARRIER 2000 PLUS SILICONE - USED AS SEALANT TO SEAL DUCT JOINTS.
	EDW14CLASY						1.06		8	DUCT "V" CLAMP WITH NEW DESIGN 14 GA BRACKETS, 14" DUCT, ASSEMBLY.
	EDW20CLASY						1.41		6	DUCT "V" CLAMP WITH NEW DESIGN 14 GA BRACKETS, 20" DUCT, ASSEMBLY.
TOTAL WEIGHT							222.96			

SINGLE WALL FACTORY BUILT DUCTWORK

- ALL DUCTWORK IS REQUIRED TO BE INSTALLED WITH THE MAXIMUM SUPPORT SPACING LISTED BELOW.
- FOR A COMPLETE LIST OF APPROVED SUPPORT METHODS, SEE THE INSTALLATION AND OPERATION MANUAL.
- DUCTWORK SHALL SLOPE NOT LESS THAN 1/16" PER LINEAR FOOT TOWARDS THE HOOD OR AN APPROVED GREASE COLLECTION RESERVOIR.
- WHERE HORIZONTAL DUCTS EXCEED 75 FEET IN LENGTH, THE SLOPE SHALL NOT BE LESS THAN 3/16" PER LINEAR FOOT.

DUCT DIAMETER	HORIZONTAL SUPPORT (FT)	VERTICAL WALL SUPPORT (FT)	VERTICAL CURB SUPPORT (FT)
5"	10'	10'	24'
6"	10'	10'	24'
7"	10'	10'	24'
8"	10'	10'	24'
10"	10'	10'	24'
12"	10'	10'	24'
14"	10'	10'	24'
16"	10'	10'	24'
18"	10'	10'	24'
20"	10'	10'	24'
22"	10'	10'	24'
24"	10'	10'	24'
26"	10'	10'	24'
28"	10'	10'	24'
30"	10'	10'	24'
32"	10'	10'	24'
34"	10'	10'	24'
36"	10'	10'	24'

DO NOT LEAK TEST USING SMOKE BOMBS CONTAINING CHLORINES/CHLORIDES. CONSULT WITH CAPTIVEAIRE FOR PROPER LEAK TESTING METHODS.

REVISIONS

DESCRIPTION	DATE:

econ·air
www.econair.com
Jacksonville Office
25 N. Market St., Office# 229, Jacksonville, FL 32202 PHONE: (904) 463 - 6242 FAX: 9192275923 EMAIL: reg55@econair.com

Bourbon Grill
STATESBORO, GA, 30459

DATE: 2/28/2025

DWG.#: 7376750

DRAWN BY:

SCALE: 3/4" = 1'-0"

MASTER DRAWING

SHEET NO. 7

SUPPORT SYSTEM DETAILS #1

DW14SUBRASY - HORIZONTAL SUPPORT

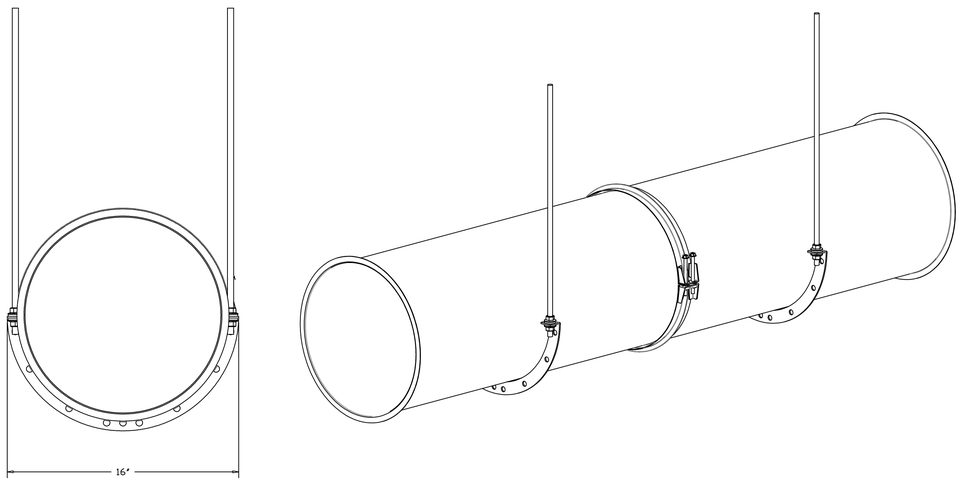

DUCTWORK #1 FRONT VIEW

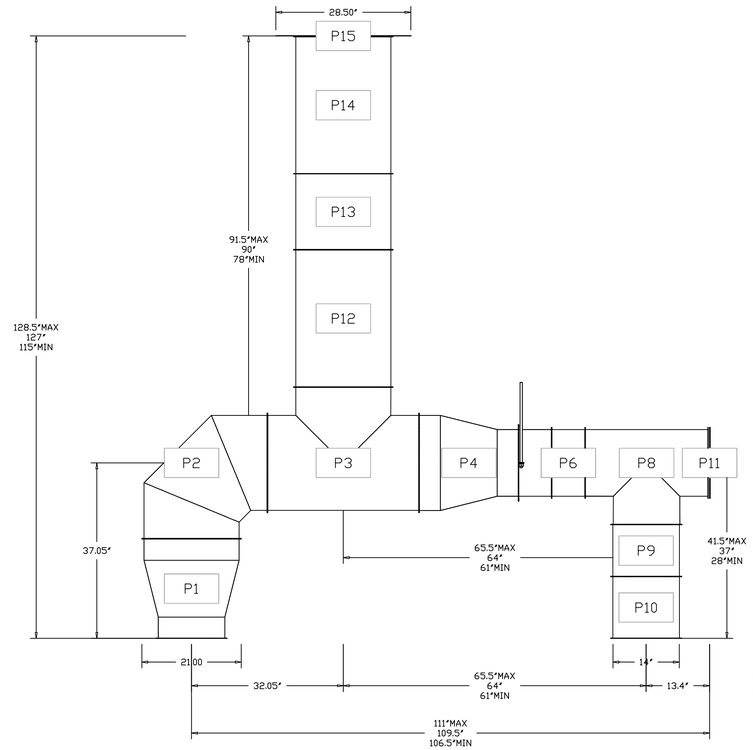

DUCTWORK #1 SIDE VIEW

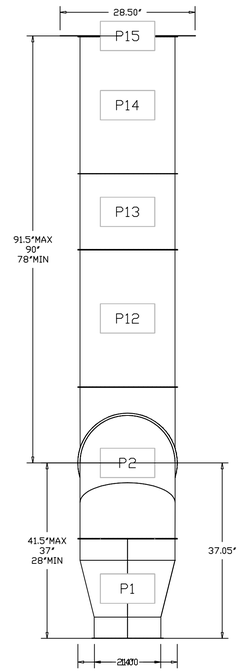

DUCTWORK #1 TOP VIEW

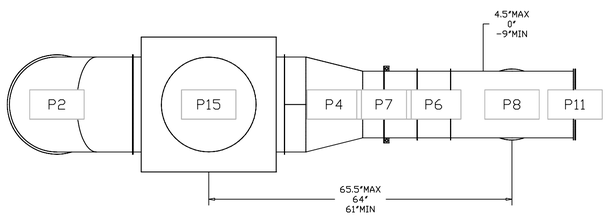

DUCTWORK #1 SE VIEW

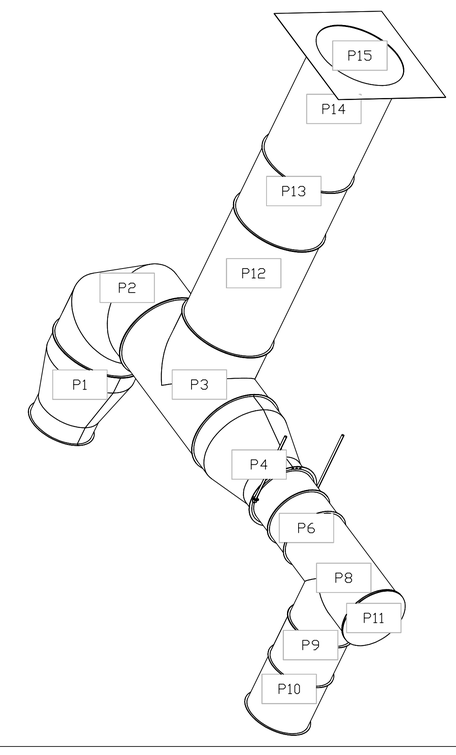

REVISIONS

DESCRIPTION	DATE:

econ·air
www.econair.com
Jacksonville Office
25 N. Market St., Office# 229, Jacksonville, FL 32202 PHONE: (904) 463 - 6242 FAX: 9192275923 EMAIL: reg65@econair.com

Bourbon Grill
STATESBORO, GA, 30459

DATE: 2/28/2025

DWG.#: 7376750

DRAWN BY:

SCALE: 3/4" = 1'-0"

MASTER DRAWING

SHEET NO. 8